Material No.	Artikelbeschreibung / Article Description	Beschreibung / Description	Drehmoment / Torque
2860620000	VG M16 - K68/15 5-10	Hutmutter / Cap Nut	2-3 Nm

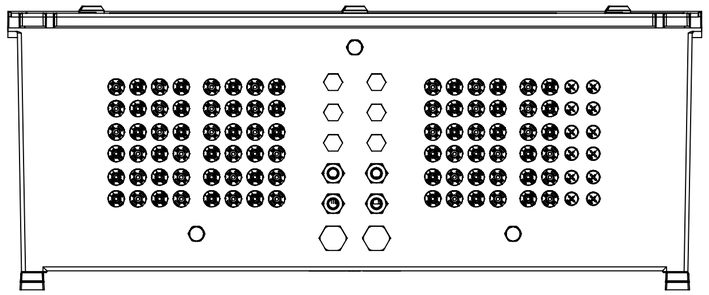

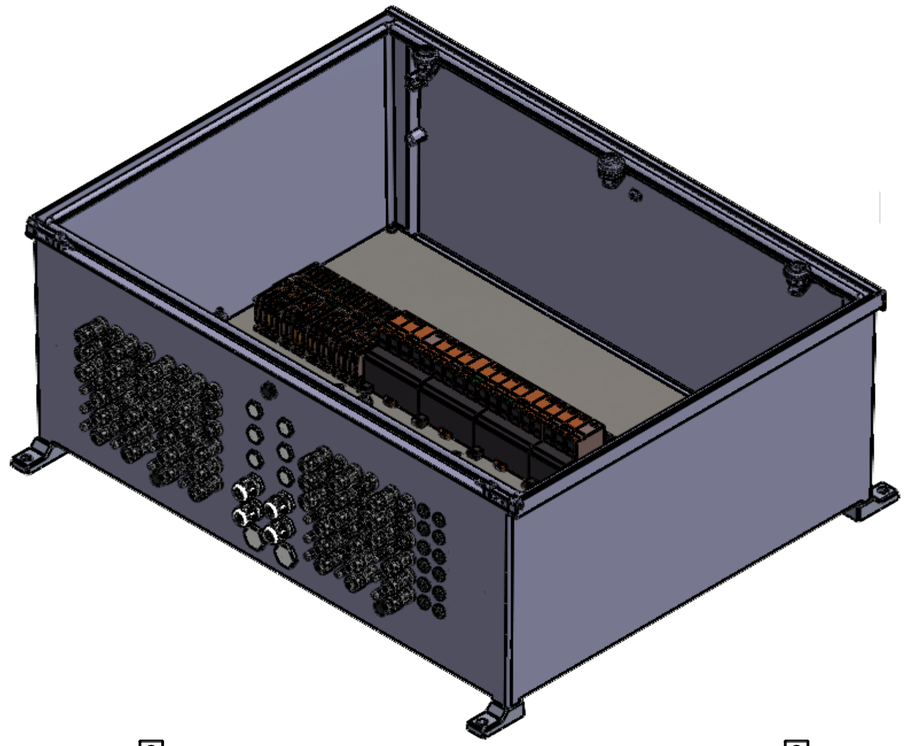

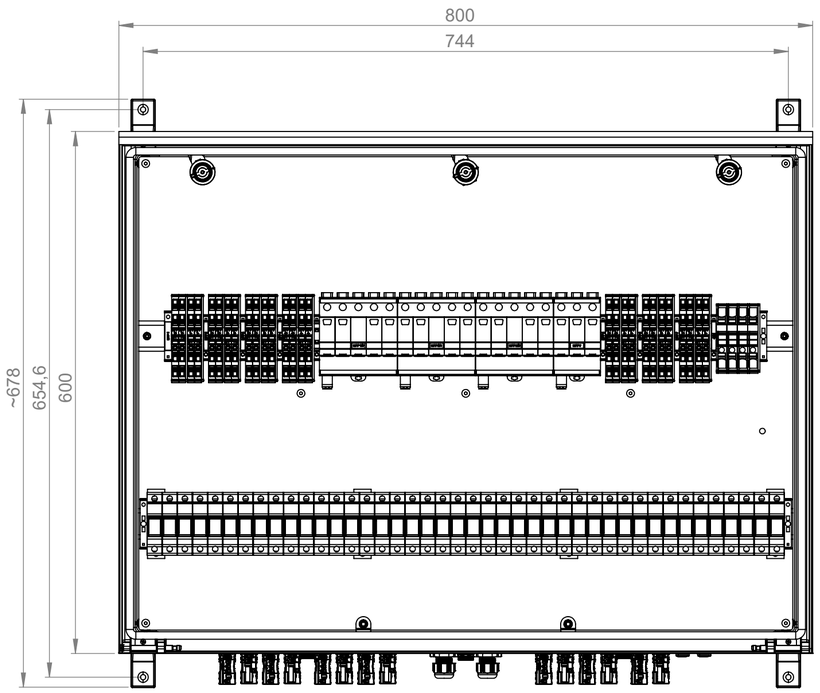

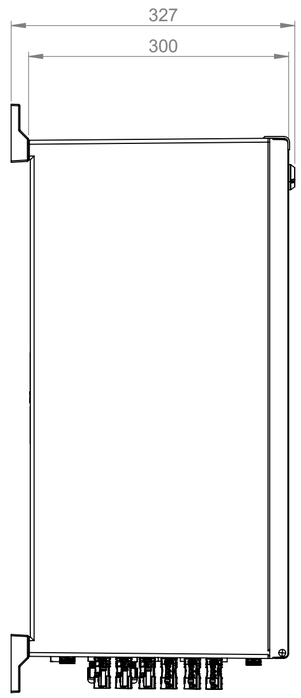

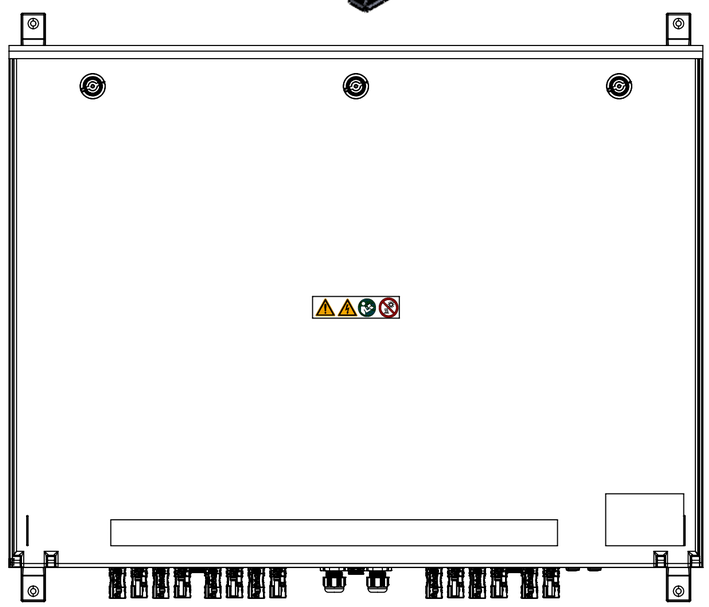

technical details:
Up to 7 MPPT (Maximum Power Point Tracking)
3x DC Input per MPPT with fuseholder for both poles 10x38mm (none preinstalled fuses)
3x DC Output per MPPT

Connection type:
Plug-MC4-EVO2

Surge voltage arrester
PV system voltage max.: 1000V DC
Requirements class: Type I+II
with remote contact

Rated DC voltage (Un): 1000 V
Rated DC current per input (Inc): tbd
Rated short-time withstand current per input: 1.25 x Inc
Rated total DC current per MPPT (I out max.): tbd
Operation ambient temperature: tbd
Degree of Protection: IP65, no direct sunlight

Additional
Product Documents

Index	Brief Description	Date	Name
-	-	-	-
-	-	-	-
-	-	-	-
-	-	-	-
-	-	-	-
-	-	-	-
-	-	-	-
-	-	-	-
-	-	-	-
-	-	-	-

1.	-
2.	-

Tolerances: ISO 2768-mK

	Date	Name
Drawn	23.05.2024	wm00504
Checked		

Criterion for print: 1:5 A2

Customer:

Customer-No:

Weidmüller

Description:
PVC DC 3IF 3O 7MPP SPD1R EVO 10

Drawing-No / Material-No: 8000141229
drw Index: 0
Sheet: 1 / 1
Customer Description: -

WEITERGABE SOWIE VERVIELFÄLTIGUNG DIESES DOKUMENTS, VERWERTUNG UND MITTEILUNG SEINES INHALTS SIND VERBOTEN, SOWEIT NICHT AUSDRÜCKLICH GESTATTET.
ZUWIDERHANDLUNGEN VERPFLICHTEN ZU SCHADENERSATZ. ALLE RECHTE FÜR DEN FALL DER PATENT-, GEBRAUCHSMUSTER- ODER GESCHMACKSMUSTERERTEILUNG VORBEHALTEN.
THE REPRODUCTION, DISTRIBUTION AND UTILISATION OF THIS DOCUMENT AS WELL AS THE COMMUNICATION OF ITS CONTENTS TO OTHERS WITHOUT EXPLICIT AUTHORIZATION IS PROHIBITED.
OFFENDERS WILL BE HELD LIABLE FOR THE PAYMENT OF DAMAGES. WEIDMÜLLER EXCLUSIVELY RESERVES THE RIGHT TO FILE FOR PATENTS, UTILITY MODELS OR DESIGNS
WEIDMÜLLER INTERFACE GmbH & Co. KG